Fellowes

PAPER SHREDDER
Personal Series

DESTRUCTEUR DE DOCUMENTS
Série usage personnel

DESTRUCTORA DE DOCUMENTOS
Serie de uso personal

MODELS / MODÈLES / MODELOS
PS70-2, PS80C-2

USE AND CARE MANUAL

MANUEL D'EMPLOI ET D'ENTRETIEN

MODO DE EMPLEO Y DE CUIDADO

PLEASE READ AND SAVE THIS MANUAL WITH YOUR ORIGINAL RECEIPT
Customer Service: 1-800-955-0959

VEUILLEZ LIRE CE MANUEL ET LE CONSERVER AVEC LE TALON D'ACHAT
Service clientèle (Canada) : 1-800-665-4339

POR FAVOR, LEA Y GUARDE ESTE MANUAL CON EL RECIBO ORIGINAL
Dpto. de Atención al Cliente: 1-800-955-0959

PRODUCT USAGE GUIDE

	PS70-2	PS80C-2
Sheet capacity*:	12	8
Shred type:	Strip	Confetti
Shred size:	5/32"	5/32" x 4/5"
Entry width:	9"	9"
Recommended use:	50-100 shredding passes per day	
Maximum running time:	15-20 min. on / 25 minutes off	

*Sheet capacity measured with 20 lb., 8-1/2" x 11" paper with the shredder operating at rated voltage. Different paper weights, humidity, and electrical currents will affect capacity.

CARACTÉRISTIQUES

	PS70-2	PS80C-2
Capacité de destruction (feuilles)* :	12	8
Type des déchets :	Bandes	Fragments
Dimension des déchets :	3.9 mm	3.9 x 20 mm
Largeur d'entrée :	230 mm	230 mm
Emploi recommandé :	50 à 100 passages de feuilles par jour	
Cycles d'utilisation conseillés :	15 à 20 minutes marche / 25 minutes arrêt	

*Capacité de destruction mesurée pour du papier 20 lb 8-1/2x11" (A4/70gsm), le destructeur fonctionnant sur tension nominale. Les différents grammages du papier, l'humidité et la tension affecteront la capacité.

CARACTERÍSTICAS

	PS70-2	PS80C-2
Capacidad de destrucción (hojas)*:	12	8
Tipo de corte:	Tiras	Confeti
Dimensión de corte:	5/32" (3.9 mm)	5/32" x 4/5" (3.9 x 20 mm)
Ancho de entrada:	9" (230 mm)	9" (230 mm)
Uso recomendado:	de 50 a 100 pasadas diarias por la destructora	
Tiempo máx. de funcionamiento:	15-20 min. encendido / 25 min. apagado	

*La capacidad de destrucción se calculó con hojas de 20 lb. 8-1/2" x 11" (A4/70gsm), con la destructora funcionando al voltaje nominal. Cambiando el peso del papel, la humedad y el voltaje se afecta tal capacidad.

IMPORTANT SAFEGUARDS

⚠WARNING

- NEVER insert hands or fingers into paper entry as serious personal injury may result.
- THIS MACHINE IS NOT A TOY. Keep children and pets away from shredder AT ALL TIMES as serious injury may result. Always unplug shredder when not in use.
- Keep loose objects (jewelry, ties, long hair) away from shredder. These items and others like them may cause serious injury if they accidentally fall into the paper entry.

⚠CAUTION

- Confetti cut shredders contain sharp edges on the underside of the machine. Use caution when positioning the shredder head onto the basket.
- Do not exceed recommended sheet capacity.
- Do not shred plastic (except credit cards), continuous forms, adhesive labels, transparencies, newsprint, or cardboard.
- This personal shredder is intended for paper only. Do not attempt to shred large paper clips or other hard materials (except staples and small paper clips).
- Do not place shredder near or over a heat source or water.
- Always turn off and unplug unit before moving or cleaning and when not in use.
- Do not insert aerosol cleaners into or around the shredder. Some agents may combust, causing serious injury.
- Never use flammable synthetic oil, petroleum- based or aerosol lubricants to oil the cutting blades. Some agents may combust, causing serious injury. **Use only a recommended oil in a non-aerosol container.** See "MAINTENANCE."
- Do not use this product if it or the cord has been damaged in any way.
- Do not open the cover for any reason. Doing so can expose you to dangerous voltages and will void your warranty.

Power Cord Care

- Place power cord in an easily accessible position, because it is the main disconnect switch.
- Do not place machine where adults, children or animals may walk on the cord.
- Do not rest anything on the power cord.
- If an extension cord is used, be sure that all products plugged into the extension cord do not exceed the extension cord ampere rating.

PARTS OF THE SHREDDER

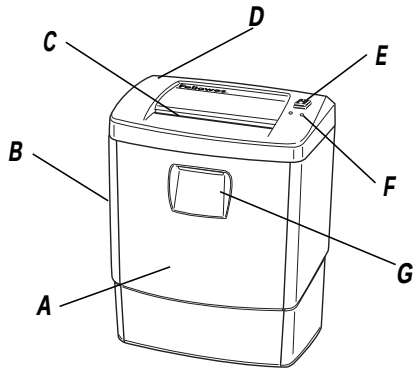

A. Basket
B. Cabinet
C. Paper entry
D. Shredder head
E. Power switch
F. LEDs (red and green)
G. Viewer

ASSEMBLY

NOTE: This shredder will operate only when used with the supplied basket. The supplied basket has a built-in safety feature which prevents the shredder from operating if used with any other basket or if improperly assembled.

To assemble shredder:

⚠CAUTION Confetti cut shredders (Model PS80C-2 only) contain sharp edges on the underside of the shredder head. Use caution when positioning the shredder head onto the basket.

⚠CAUTION Do not lock shredder head onto cabinet with basket installed. Damage will result to shredder basket and cabinet.

1. Position shredder head over cabinet. Place shredder head into top of cabinet as shown in Figure 1.
2. Firmly push down on four corners of shredder head to "lock" shredder head into position.
3. Push basket into shredder cabinet as shown in Figure 1. **Push basket front in firmly so edges of basket / cabinet are aligned properly.**

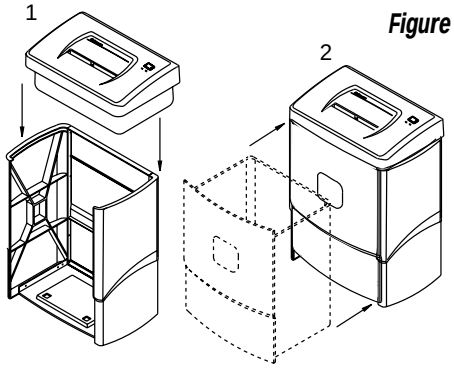

Figure 1

NOTE: To disassemble, pull out basket, place foot on bottom of cabinet, and firmly pull up on shredder head.

OPERATION

WARNING This product features an auto-start sensor. This sensor will turn on the cutting blades whenever anything is inserted into the paper entry (while the power switch is in the **AUTO** position). For the safety of pets and children, we recommend always moving the power switch to **OFF** and unplugging whenever the shredder is unattended or not in use.

1. Assemble shredder head to basket (see "ASSEMBLY").
2. Remove any large paper clips or other foreign objects (except staples and small paper clips) from paper. If folding paper to fit paper entry, adjust sheet capacity appropriately.

CAUTION Do not attempt to shred paper clips or other hard materials (except staples and small paper clips) with this machine. Extensive use of paper clips or other hard materials will result in damage
to the cutting system and will void the manufacturer's warranty.

3. Be sure power switch is in the **OFF** (O) position. Plug shredder into the proper power supply outlet.
4. Move power switch to **AUTO** (I) position. To clear the cutting blades, the shredder will "run" for about 1 second immediately after switching to **AUTO** (I). When the unit is turned on and in standby mode (green LED lights), the shredder is ready to be fed paper through the paper entry. (See "TROUBLESHOOTING" if red LED is lit.)

WARNING NEVER insert hands or fingers into paper entry as serious personal injury may result.

CAUTION Do not exceed recommended sheet capacity (see "Product Usage Guide" on page 1).

5. Slide paper **straight** into paper entry until the shredder automatically begins shredding.

   The shredder automatically stops when shredding is complete.

   Continue shredding as desired to a **MAXIMUM shredding time of 15-20 minutes**. At this time, the machine MUST be allowed to **"cool down" for a MINIMUM of 25 minutes**. (See "Cool-Down Cycle" section for more information.)

   If the shredder jams or shuts off before the maximum shredding time, see "Clearing a Jam" section for further instructions.
6. Move power switch to **OFF** (O) position when shredding is complete.
7. Unplug power cord from outlet when shredder is unattended not in use.
8. Look through viewer to see if basket is full. If full, pull out basket and empty basket contents. Replace basket into cabinet.

Cool-Down Cycle

This shredder is protected with a special safety feature which prevents the motor from overheating with extensive use. ***When shredding is attempted beyond the machine's maximum running time, the shredder will automatically shut off its motor until it has cooled to an acceptable operating level.*** This is normal and the shredder will return to operation after the "cool-down" period. See "Product Usage Guide" (page 1) for maximum running time and related cooling or "off" time.

Clearing a Jam

If the shredder sheet capacity is exceeded or paper is not put in straight, a jam may result. See "Product Usage Guide" (page 1) for maximum sheet capacity for your shredder. In the case of a jam, the shredder's red LED will light and the shredder will automatically stop until the jam is cleared.

To clear a jam:

1. Move the power switch to the **REVERSE** (R) position. (If waste basket is full, empty it before clearing jam.) The shredder will reverse the paper to clear the jam.
2. If the shredder jams in reverse, move the power switch to **AUTO** (I) and allow to run for about five seconds. If jam does not clear, move power switch to **REVERSE** (R) again and allow to run for about five seconds. Repeat this procedure until the jam is cleared. If necessary, use care to grasp the paper carefully and pull out to clear the jam.
3. Once the jam is cleared, move the power switch to **AUTO** (I) for continued shredding or **OFF** (O) if shredding is complete.

MAINTENANCE

Confetti cut shredders (Model PS80C-2) require regular (monthly) oiling of the cutting blades to maintain proper operation. Failure to oil the blades regularly could result in reduced sheet capacity performance, excessive noise during operation, paper jams and possibly shredder failure.

We recommend using only Powershred Lubricant #35250 (available by contacting Fellowes) or a vegetable-based oil (such as corn or canola) in a non-aerosol container with an extension nozzle.

CAUTION Never use flammable synthetic oil, petroleum-based, or aerosol lubricants to oil the cutting blades. Some agents may combust, causing serious injury.

To oil the cutting blades:

1. From the top of the shredder, squeeze the recommended lubricant across the full width of the blades.
2. Move the power switch to **AUTO** (I) position and allow the blades to run at least 3 seconds.
3. Move the power switch to **REVERSE** (R) position and allow it to run for at least 3 seconds.
4. Repeat steps 2-3 above at least 3 times.

TROUBLESHOOTING

Shredder will not operate.	a. Shredder is not plugged in. b. Power switch is in the **OFF** (O) position. Move switch to **AUTO** (I) position. c. Shredder is jammed. See "Clearing a Jam" section. d. Shredder has exceeded the maximum run time and requires a "cool-down" time. See "Product Usage Guide" (page 1). e. Shredder is not assembled properly. See "Assembly."
Shredder makes a loud squeaking or rubbing noise. (Model PS80C-2 only)	Cutting blades need to be oiled REGULARLY. See "MAINTENANCE" section.
Shredder suddenly stops while shredding.	a. Shredder has exceeded the maximum run time and requires a "cool-down" time. See "Product Usage Guide" (page 1). b. Shredder is jammed. See "OPERATION - Clearing a Jam."
Shredder shreds less than capacity. (Model PS80C-2 only)	Cutting blades need to be oiled REGULARLY. See "MAINTENANCE" section.
Red LED is lit.	a. Shredder head is not assembled properly (Model PS80C-2 only). See "ASSEMBLY." b. Paper is jammed. See "OPERATION - Clearing a Jam."
Shredder runs for a few seconds after the paper has cleared the cutters. (Model PS80C-2 only)	This is normal. The shredder runs a few seconds longer than the paper in order to keep the cutters clear of paper particles and reduce the chances of a jam.

LIMITED WARRANTY

Fellowes warrants the cutting cylinders of the machine to be free of defects in material and workmanship for 7 years from the date of purchase by the original consumer. Fellowes warrants all parts of the machine to be free of defects in material and workmanship for 1 year from the date of purchase by the original consumer. If any part is found to be defective during the warrant period, your sole and exclusive remedy will be repair or replacement, at Fellowes' option and expense, of the defective part.

This warranty does not apply in cases of abuse, mishandling or unauthorized repair. ANY IMPLIED WARRANTY, INCLUDING THAT OF MERCHANTABILITY OR FITNESS FOR A PARTICULAR PURPOSE, IS HEREBY LIMITED IN DURATION TO THE APPROPRIATE WARRANTY PERIOD SET FORTH ABOVE. In no event shall Fellowes be liable for any consequential or incidental damages attributable to this product. This warranty gives you specific legal rights. You may have other legal rights that vary from state to state.

For more detail or to obtain service under this warranty, please contact Fellowes Customer Service at 1-800-955-0959, Monday through Friday, 8 AM - 5 PM (Central Standard Time).

For specific instructions on obtaining service under this warranty on machines purchased outside the USA, contact the appropriate location listed in the **Contact for Service** section of this instruction manual.

Warrantor: Fellowes, Inc.

Contact For Service
Vos Contacts Fellowes
Sus Contactos Fellowes

United States	1-800-955-0959
Canada	1-800-665-4339
Australia	1-800-33-11-77

www.fellowes.com

Fellowes®

1789 Norwood Avenue • Itasca, Illinois 60143-1095
630-893-1600

Australia	Benelux	Canada	France	Germany	Italy	Japan	Poland	United Kingdom
Tullamarine, Vic	Vianen, NL	Markham, Ont.	Rennes, I-V	Garbsen, Han.	Camerano, AN	Tokyo	Warsaw	Doncaster, S. Yorks.

© 2001 Fellowes. Printed in China. Form No. 30112